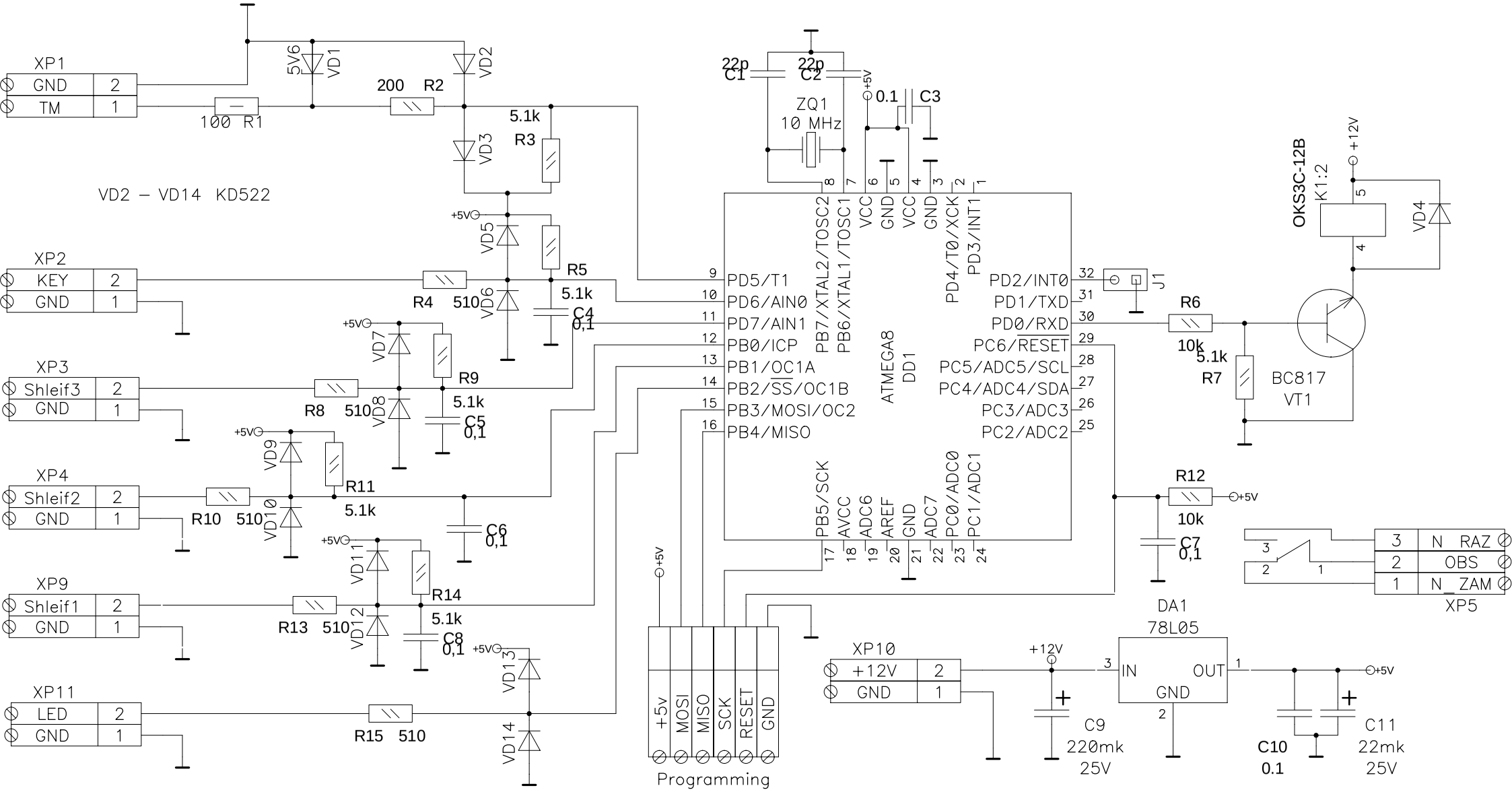
XP1
GND 2
TM 1
100 R1
5V6 VD1
VD2
200 R2
VD3
5.1k R3
VD2 – VD14 KD522
+5V
VD5
R5 5.1k
XP2
KEY 2
GND 1
R4 510
VD6
C4 0,1
VD7
R9 5.1k
XP3
Shleif3 2
GND 1
R8 510
VD8
C5 0,1
VD9
R11 5.1k
XP4
Shleif2 2
GND 1
R10 510
VD10
C6 0,1
VD11
R14 5.1k
XP9
Shleif1 2
GND 1
R13 510
VD12
C8 0,1
VD13
XP11
LED 2
GND 1
R15 510
VD14
22p C1
22p C2
ZQ1 10 MHz
0.1 C3
PB7/XTAL2/TOSC2
PB6/XTAL1/TOSC1
VCC GND VCC GND
PD4/T0/XCK
PD3/INT1
PD5/T1
PD6/AIN0
PD7/AIN1
PB0/ICP
PB1/OC1A
PB2/SS/OC1B
PB3/MOSI/OC2
PB4/MISO
ATMEGA8
DD1
PD2/INT0
PD1/TXD
PD0/RXD
PC6/RESET
PC5/ADC5/SCL
PC4/ADC4/SDA
PC3/ADC3
PC2/ADC2
PB5/SCK
AVCC
ADC6
AREF
GND
ADC7
PC0/ADC0
PC1/ADC1
J1
R6 10k
R7 5.1k
BC817 VT1
OKS3C-12B
K1:2
+12V
VD4
R12 10k
C7 0,1
DA1 78L05
IN OUT GND
XP5
3 N_RAZ
2 OBS
1 N_ZAM
XP10
+12V 2
GND 1
C9 220mk 25V
C10 0.1
C11 22mk 25V
+5v MOSI MISO SCK RESET GND
Programming